NQD-ERDS-5460 PARTS LIST

NUMBER	DESCRIPTION	PART #
1	HARDWARE - (4) 1/4-20 x 7/8 SOCKET HEAD BOLT, (4) 1/4-20 GR8 NUTS, (2) 5/16-18 x 1 GR5 HEX HEAD BOLT, (4) 5/16 SAE WASHER OR 1/4 USS WASHER, (2) 5/16-18 NYLOC NUT, (1) NQD-097 SPRING, (1) SPRING PULLER	A
1B	U-BRACKET	UB-04
1C	L-BRACKET	EX-08
2	HANDLE ASSEMBLY	NQD-092
3	UPSTOP BOLT ASSEMBLY	NQD-UPSTOPBOLT
4	(1) NQD-095, (1) 1/4-20 x 1 GR8 BOLT, (2) 1/4 SAE WASHER, (1) 1/4-20 GR8 NUT	NQD-095
5	(1) 1/4-20 x 2 CARRIAGE BOLT, (2) 1/4-20 GR8 NUT	NQD-DOWNSTOP BOLT
6	(1) U-NUT, (1) FLAT HEAD BOLT	NQD-0-UNUT
7	DOOR WITH HARDWARE	NQD-ERDS-5460 DOOR
8	HANDLE GRIP	NQD-GRIP
9	HANDLE PIVOT BRACKET - (2) 5/16-18 x 1 1/8 GR8 BOLT, (4) 1/4 USS WASHER, (2) 5/16 INT/EXT LOCK WASHER, (2) 5/16-18 LOCKNUT	NQD-093
10	(1) HANDLE PIVOT, (1) NQD-098 KIT, (1) NQD-0-UNUT	NQD-075
11	CENTER DEFLECTOR WITH HARDWARE	NQD-100
12	DOOR BAR	NQD-080
13	SPRING BOLT ASSEMBLY	NQD-096
14	SPRING WITH PULLER	NQD-097
15	DOOR PIVOT BUSHING WITH BOLT AND WASHER	NQD-088-3 KIT
16	HANDLE PIVOT BUSHINGS WITH BOLT, NUT, AND WASHER	NQD-098 KIT
17	RUBBER BUMPER WITH HARDWARE	NQD-091
18	BASE PLATE DOUBLE SLOT	NQD-103
19	STAY BAR ASSEMBLY WITH HARDWARE	NQD-099
20	CAM PLATE ASSEMBLY - (1) NQD-090, (2) NQD-088-2, (1) 3/8-16 x 1 1/2 BOLT, (2) 3/8 x 1 1/2 FENDER WASHER, (2) PLASTIC WASHERS (#20481), (1) 3/8-16 LOCKNUT, (1) NQD-0-UNUT	NQD-090 KIT
21	SPOOL BUSHING WITH BOLT, NUT, AND NQD-0-UNUT	NQD-094
22	CENTER DEFLECTOR	NQD-121-1

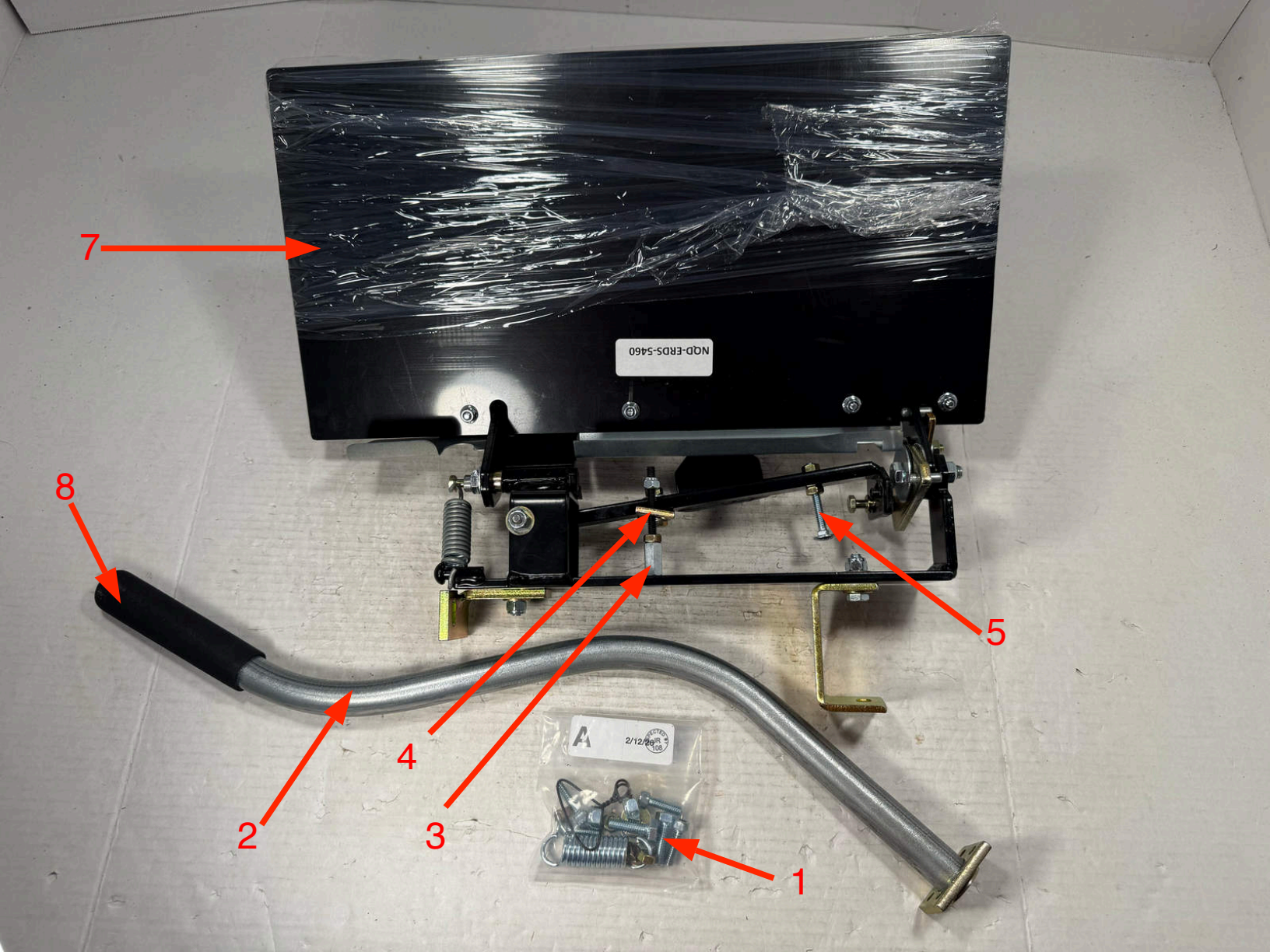
7
NQD-ERDS-5460
8
4
2
3
5
1

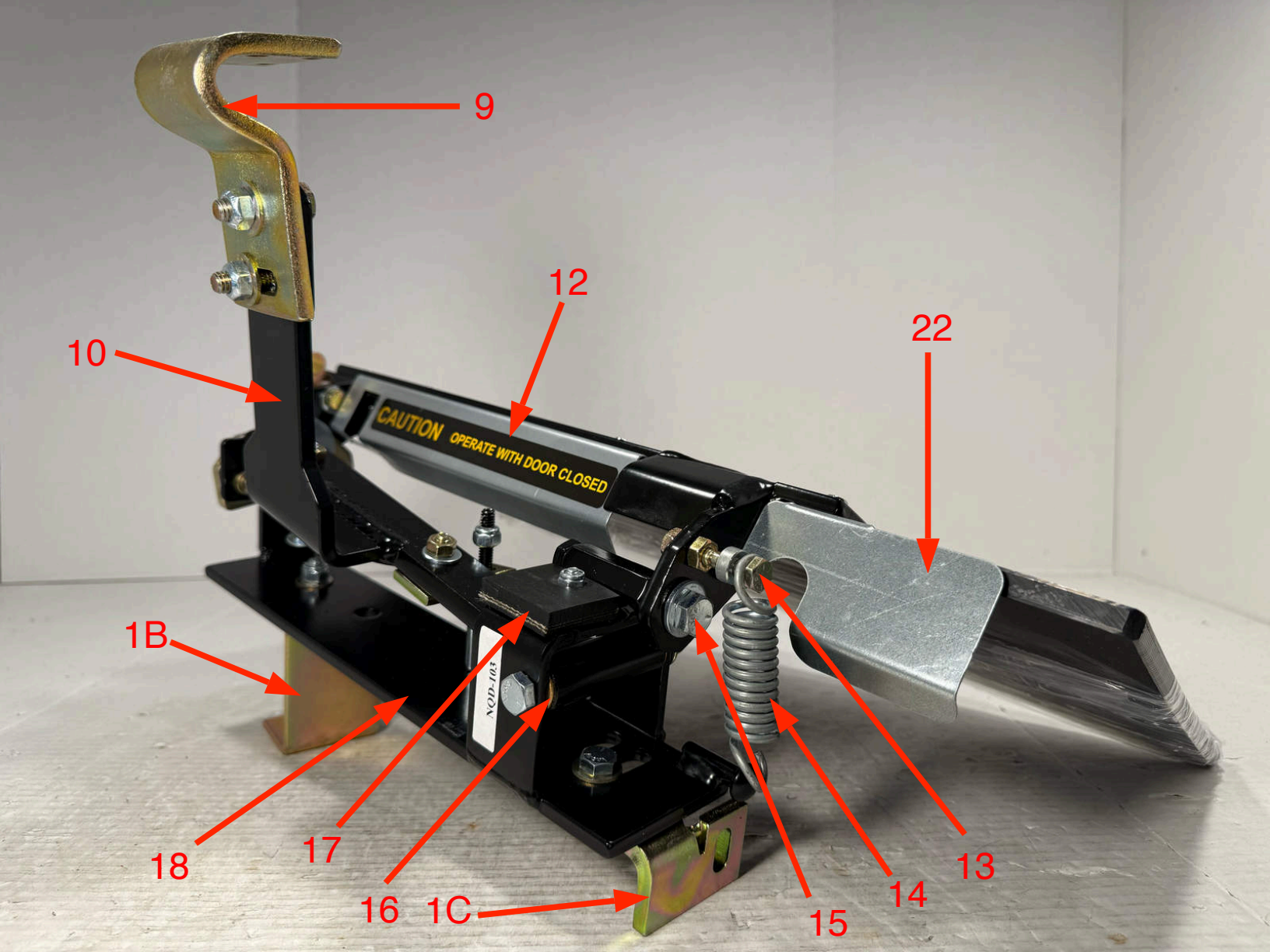
9
12
10
22
CAUTION
OPERATE WITH DOOR CLOSED
1B
18
17
16
1C
15
14
13

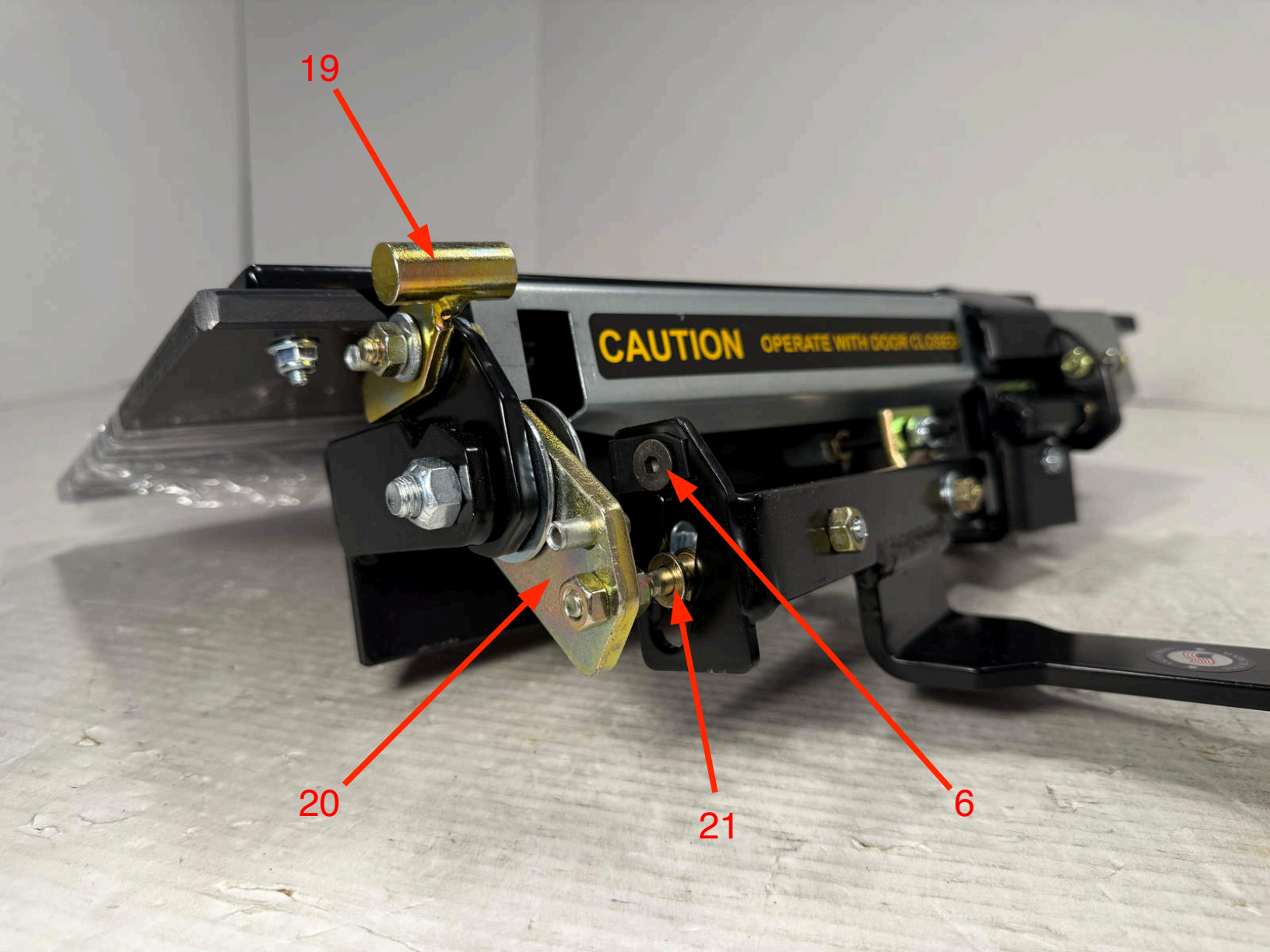
19
CAUTION
20
21
6