NQD-ERDS-48 KIT CONTENTS. INSPECTED BY:_____

BASE PLATE- **(NQD-103)** DOUBLE SLOT WITH 1/8" PLASTIC BUMPER SPACER (NQD-113-3)

DOOR BAR- **(NQD-080)** STANDARD

HANDLE PIVOT- **(NQD-149)** WITH NQD-093 MOUNTED CLOSER TO THE DOOR WHEN OPEN

HANDLE- **(NQD-092)** STANDARD

DOOR- **NQD-ELP52**

CENTER DEFLECTOR- **(NQD-100)** STANDARD

BRACKETS- INSTALLED :

(1) **EX-08** ELS L-BRACKET

(1) **UB-04** 3 1/16" TALL U-BRACKET

HARDWARE KIT- **A** CONTENTS:

(**4**) 1/4-20 X 7/8 SOCKET HEAD BOLT
(**4**) 1/4-20 GR 8 NUTS
(**2**) 5/16-18 X 1 GR 5 HEX HEAD BOLT
(**4**) 5/16 SAE or 1/4 USS WASHER
(**2**) 5/16-18 NYLOC NUT
(**1**) NQD-097-SPRING
(**1**) SPRING PULLER

NQD-ELS4/6UC5260, NQD-ESTA-60, NQD-ELP52, NQD-ERDS-48, & NQD-ERDS-5460

REV. A	BY:HRS	02-15-2019

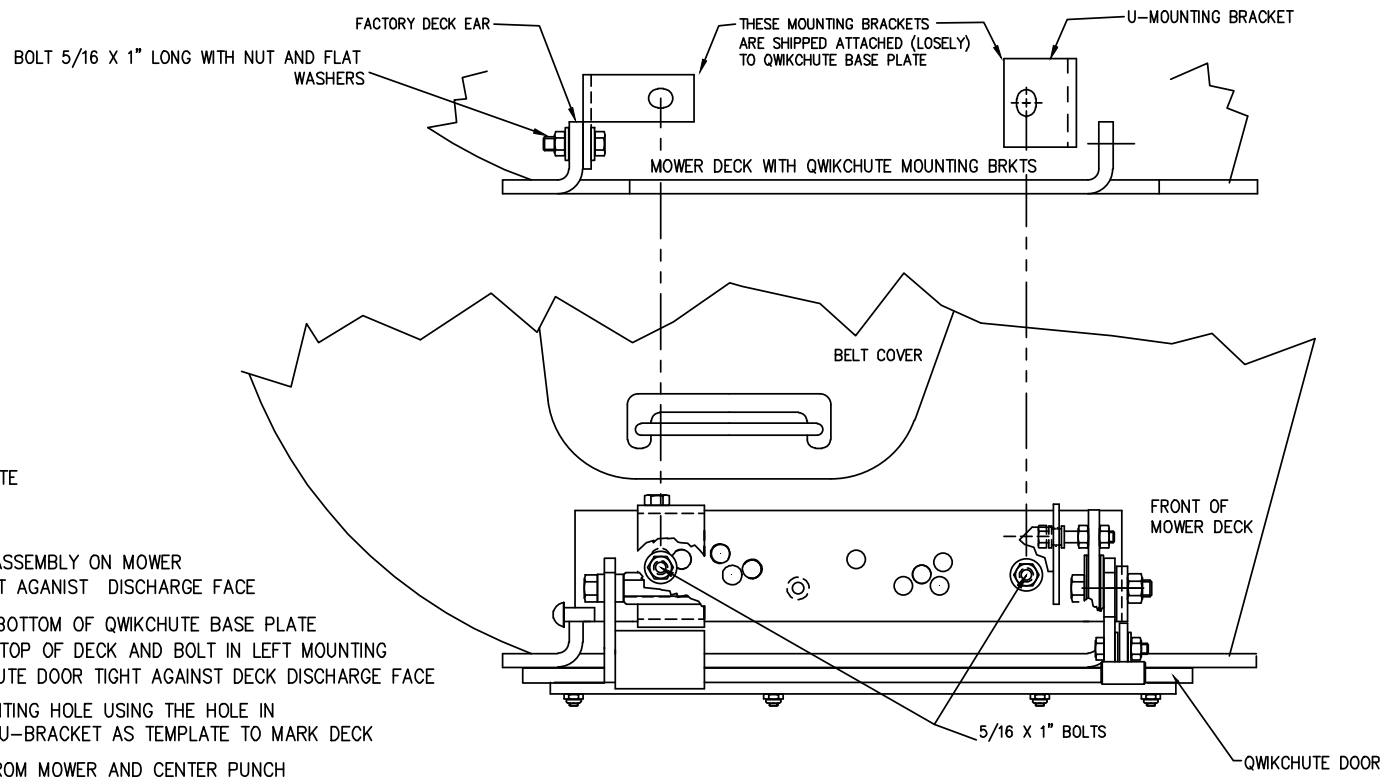

ALL PARTS OF QWIKCHUTE ASSEMBLY NOT SHOWN FOR CLARITY

STEP 1

A REMOVE FACTORY CHUTE

STEP 2

A POSITION QWIKCHUTE ASSEMBLY ON MOWER DECK WITH DOOR TIGHT AGANIST DISCHARGE FACE

B WITH U-BRACKET ON BOTTOM OF QWIKCHUTE BASE PLATE AND SITTING FIRM ON TOP OF DECK AND BOLT IN LEFT MOUNTING BRACKET AND QWIKCHUTE DOOR TIGHT AGAINST DECK DISCHARGE FACE

C MARK DECK FOR MOUNTING HOLE USING THE HOLE IN THE BOTTOM HOLE IN U-BRACKET AS TEMPLATE TO MARK DECK

D REMOVE QWIKCHUTE FROM MOWER AND CENTER PUNCH THE MARKED MOUNTING HOLE LOCATION AND DRILL 3/8" DIA THRU DECK.

E REPOSITION QWIKCHUTE ON MOWER DECK WITH MOUNTING BRACKETS. INSTALL MOUNTING HARDWARE (BOLT 5/16 UNC X 1" LONG WITH FLAT WASHERS AND NUT) 2 PLACES TIGHTEN MOUNTING HARDWARE WITH QWIKCHUTE DOOR TIGHT AGAINST DISCHARGE FACE

STEP 3

A INSTALL SPRING (SEE SPRING INSTALLATION SHEET)

B INSTALL HANDLE (SEE HANDLE INSTALLATION SHEET)

QWIKCHUTE INSTALLATION
EXMARK ULTRA CUT 52"& 60" SERIES 4 AND 6
NQD-ELS4/6UC5260 AND NQD-ESTA-5260

X	X
X	X
NQD-ELS4/6UC5260	X
NQD-ESTA-5260	X
NEXT ASSY	FINAL ASSY

DATE: 2010
REV. A 02-15-2019

DWG.	EX-16
FILE:	EX16.DWG

NQD–097

SPRING INSTALLATION QWIKCHUTE NQD MODEL

STEP 2 LOOP FINGERS OVER SCREWDRIVER BLADE AND LIFT SPRING ON TO SPRING BOLT
CAUTION ––DO NOT OVER STRECH SPRING
DISCARD WIRE LOOP AFTER SPRING IS CONNECTED

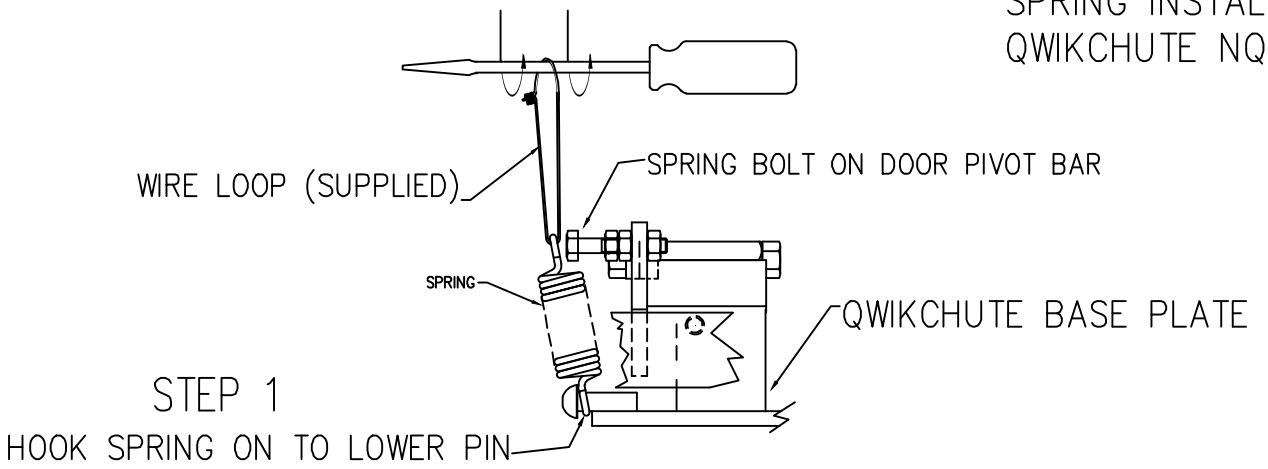

STEP 1
HOOK SPRING ON TO LOWER PIN

QWIKCHUTE OPERATING PROCEDURE

OPEN FULLY– MOVE HANDLE AWAY FROM OPERATOR QUICKLY
CLOSED– MOVE HANDLE TOWARD OPERATOR QUICKLY
PARTIALLY OPENED– FROM THE CLOSED POSITION, MOVE HANDLE AWAY FROM OPERATOR UNTIL STAY BAR SWINGS INTO POSITION AND RELEASE HANDLE.

TO CLOSE FROM PARTIALLY OPEN POSITION, QUICKLY OPEN AND THEN CLOSE. (SOME MODELS DO NOT HAVE PARTIAL OPEN FEATURES)

OIL ALL BEARING POINTS WEEKLY OR AS NEEDED

HANDLE INSTALLATION AND ADJUSTMENT

NQD–093

NQD115.DWG REV. C

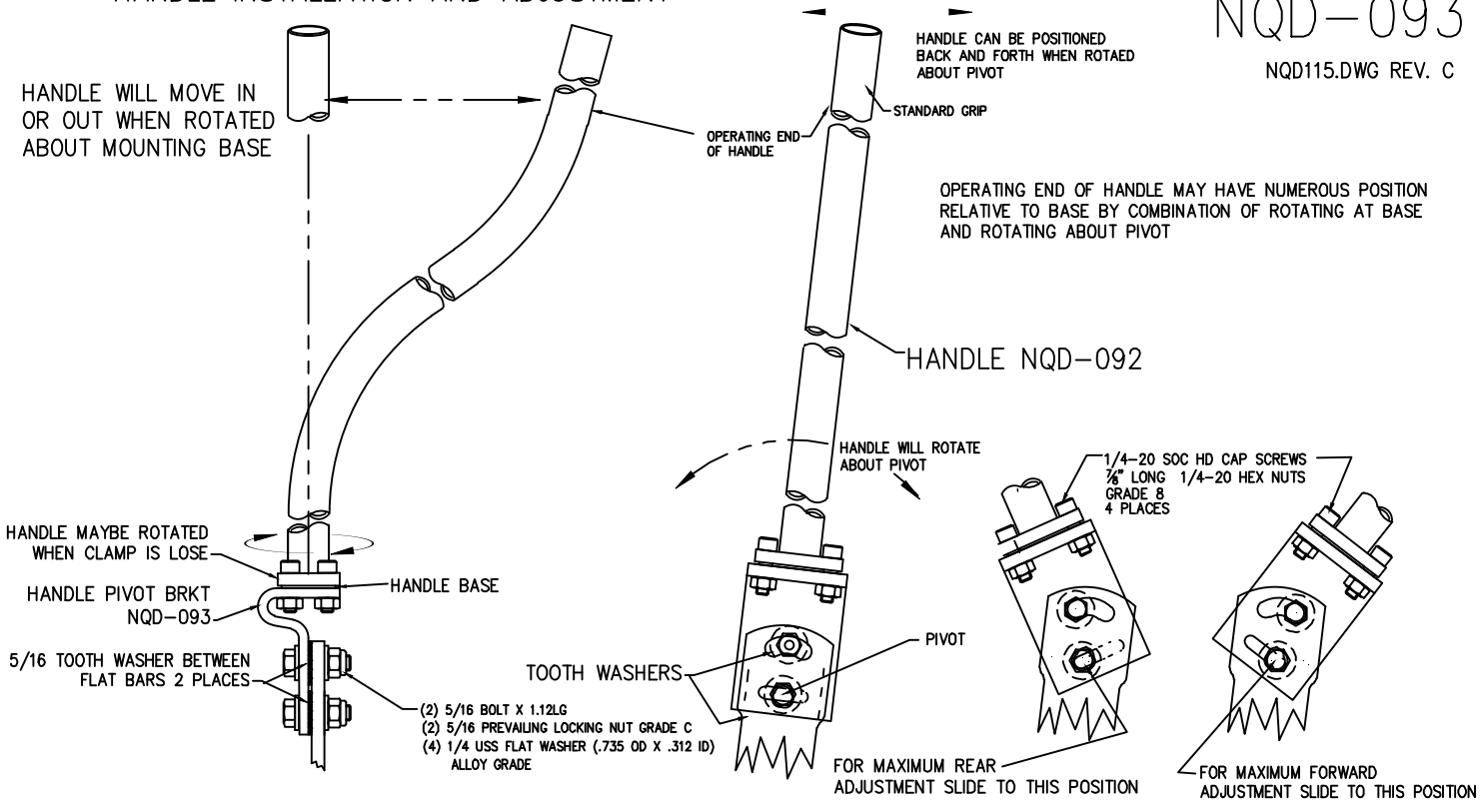

WARRANTY
OIL ALL BEARING POINTS WEEKLY OR AS NEEDED

GTM Manufacturing, Inc. products are warranted to the original purchaser to be free from defects in materials and workmanship for a period of 90 days from the date of purchase.
Any part(s) of GTM products found to be defective within the warranty period shall, at GTM's option, be repaired or replaced without charge.

Warranty consideration is obtained by returning any GTM product/part believed to be defective to GTM Manufacturing, Inc. within the applicable warranty period. **Please call for authorization**.

GTM Manufacturing, Inc.
622 EAST MYERS BLVD
MASCOTTE, Fl. 34753
(407) 654-6598
www.qwikchute.com

Warranty does not apply to conditions resulting from:

1. Damage(s) and/or costs associated with shipping and or/ transportation.
2. Lack of normal maintenance, adjustments, or service required for regular use of the product.
3. Modifications, service/repairs, parts or components not authorized by GTM.

GTM shall not be liable for any special, consequential, direct or indirect damages, and expressly states there are no implied warranties. Some states do not allow limitation of incidental or consequential damages, accordingly the above limitations and exclusions may not apply to you. This warranty provides you with specific legal rights which may vary from state to state.

IT IS THE OWNERS RESPONSIBILITY TO PROPERLY COMPLETE AND MAIL THE WARRANTY REGISTRATION CARD.

PROOF OF PURCHASE AND REGISTRATION WILL BE REQUIRED IN ORDER TO OBTAIN WARRANTY SERVICE.

WARRANTY REGISTRATION CARD

Name of Purchaser: _____
Street Address / P.O. Box: _____County:_____
City: _____State_____ Zip Code: _____

Model Number: _____ PURCHASE DATE: _____|_____|_____

Dealer Name: _____
Street Address: _____ County: _____
City: _____State:_____Zip Code: _____

Customer Received: Operators Manual ( ) Safety Instructions ( ) Demonstration ( )

_____ _____ Customers
Signature Date