BASE PLATE- STANDARD

DOOR BAR- STANDARD

HANDLE PIVOT- OUT THE REAR (WITH JD-05, JDQTR61 HANDLE PIVOT EXTENSION)

USE (2)1/4-20 X 1 ¼ BOLTS/(4) SAE WASHERS/(2) NYLOCKS TO MOUNT JD-05 (JDQTR61 STYLE HANDLE PIVOT EXTENSION) TO HANDLE PIVOT BAR OUT THE REAR



MOUNT HANDLE PIVOT BRACKET TO THE OUTSIDE OF THE EXTENSION USING (2) 5/16-18 X 1 1/8 GRADE 8 BOLTS/(4) SAE WASHERS/(2) LOCK WASHERS/(2) LOCK NUTS AS SHOWN ABOVE

HANDLE- STANDARD

DOOR- NQD-GPSFLD60

CENTER DEFLECTOR- STANDARD

HARDWARE KIT- B + PLASTIC BAFFLE

BAFFLE/SUBPLATE- NQD-HFT54 STYLE, ¼" THICK PLASTIC BAFFLE TO BE DRILLED AFTER DOOR IS MOUNTED TO QWIKCHUTE.

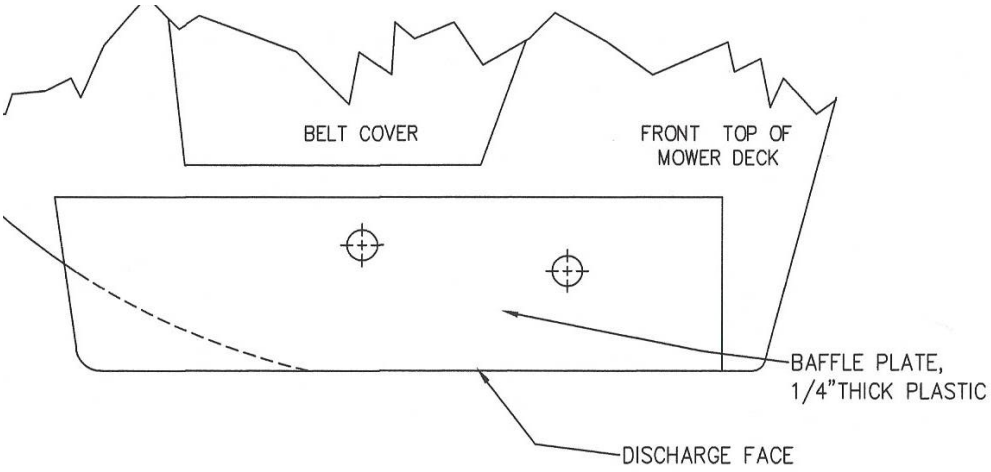

TO BE FITTED BETWEEN QWIKCHUTE BASE PLATE AND TABLE WITH DOOR 90 DEGREES. ONCE BAFFLE IS IN PLACE (TIGHT AGAINST THE BEND OF THE DOOR) MARK/DRILL HOLES IN THE PLASTIC BAFFLE THAT LINE UP WITH THESE MARKED HOLES ON THE QWIKCHUTE BASE PLATE:

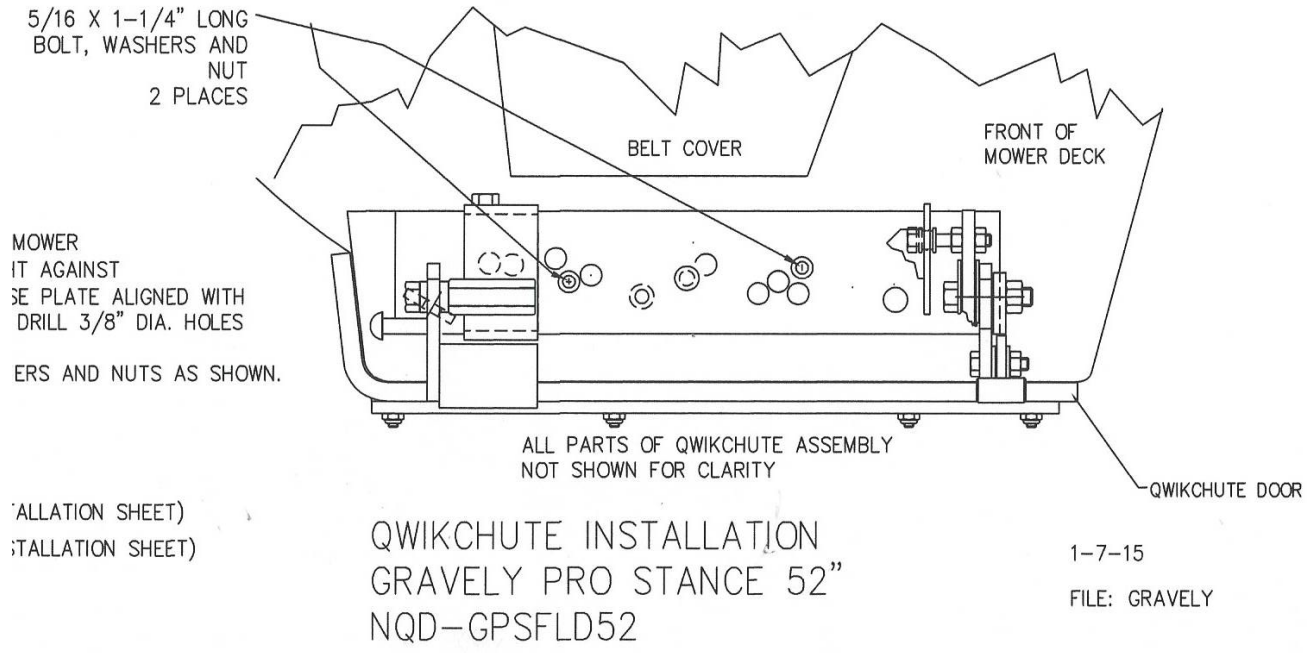

BOX SIZE- LARGE

NQD–097

SPRING INSTALLATION QWIKCHUTE NQD MODEL

STEP 2 LOOP FINGERS OVER SCREWDRIVER BLADE AND LIFT SPRING ON TO SPRING BOLT
CAUTION ––DO NOT OVER STRECH SPRING
DISCARD WIRE LOOP AFTER SPRING IS CONNECTED

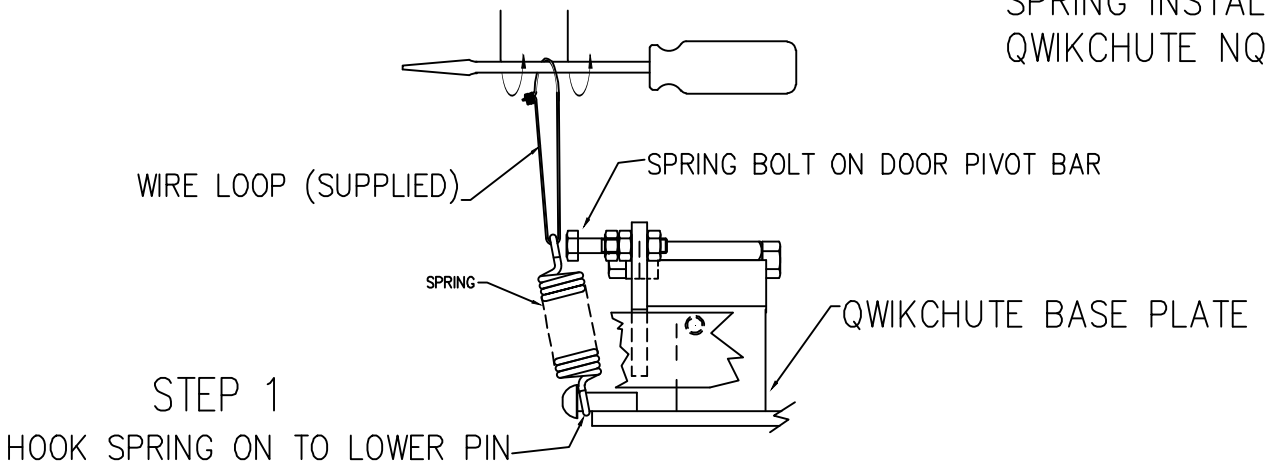

STEP 1
HOOK SPRING ON TO LOWER PIN

QWIKCHUTE OPERATING PROCEDURE

OPEN FULLY– MOVE HANDLE AWAY FROM OPERATOR QUICKLY
CLOSED– MOVE HANDLE TOWARD OPERATOR QUICKLY
PARTIALLY OPENED– FROM THE CLOSED POSITION, MOVE HANDLE AWAY FROM OPERATOR UNTIL STAY BAR SWINGS INTO POSITION AND RELEASE HANDLE.

TO CLOSE FROM PARTIALLY OPEN POSITION, QUICKLY OPEN AND THEN CLOSE. (SOME MODELS DO NOT HAVE PARTIAL OPEN FEATURES)

OIL ALL BEARING POINTS WEEKLY OR AS NEEDED

HANDLE INSTALLATION AND ADJUSTMENT

NQD–093

NQD115.DWG REV. C

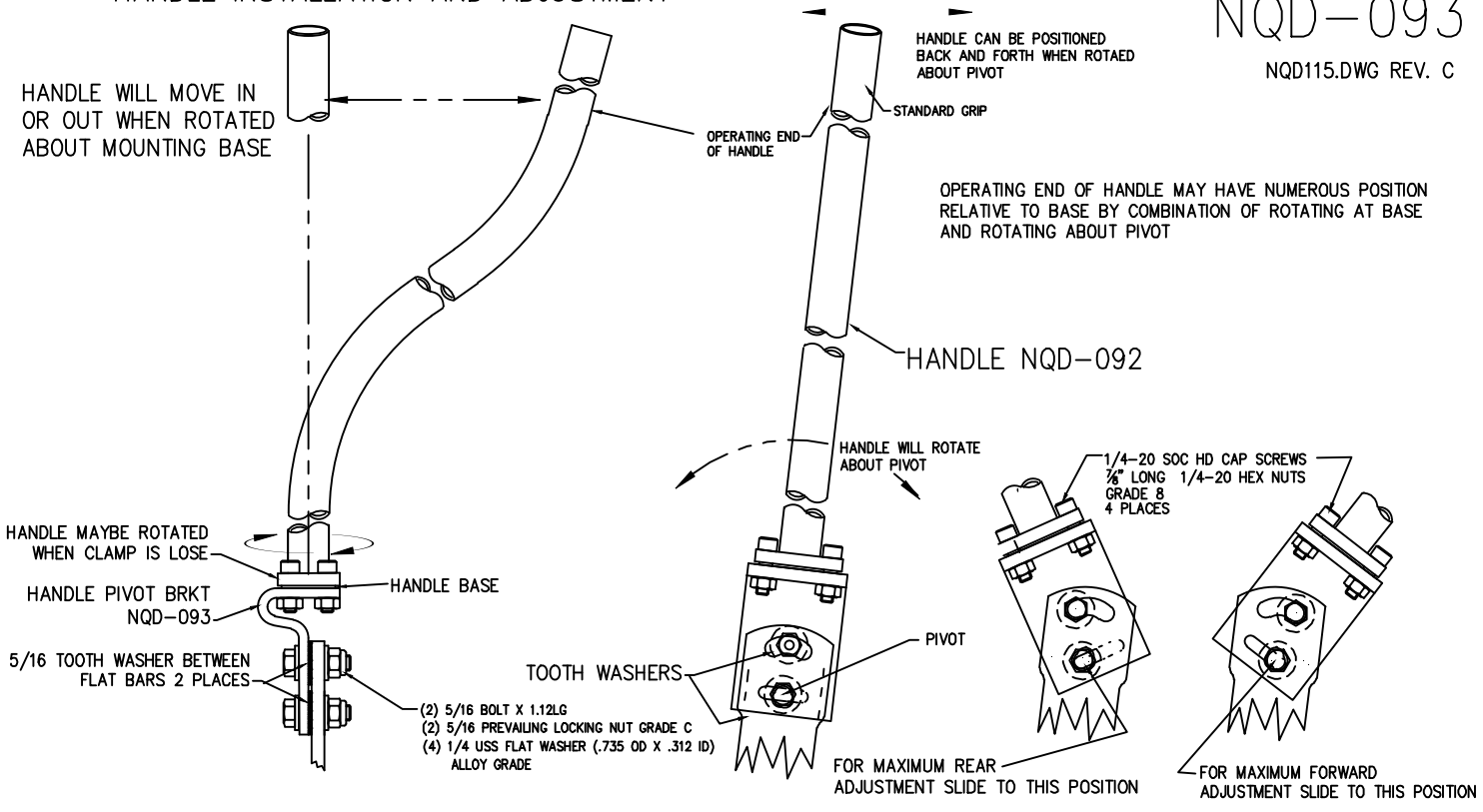

WARRANTY
OIL ALL BEARING POINTS WEEKLY OR AS NEEDED

GTM Manufacturing, Inc. products are warranted to the original purchaser to be free from defects in materials and workmanship for a period of 90 days from the date of purchase.
Any part(s) of GTM products found to be defective within the warranty period shall, at GTM's option, be repaired or replaced without charge.

Warranty consideration is obtained by returning any GTM product/part believed to be defective to GTM Manufacturing, Inc. within the applicable warranty period. **Please call for authorization**.

GTM Manufacturing, Inc.
622 EAST MYERS BLVD
MASCOTTE, Fl. 34753
(407) 654-6598
www.qwikchute.com

Warranty does not apply to conditions resulting from:

1. Damage(s) and/or costs associated with shipping and or/ transportation.
2. Lack of normal maintenance, adjustments, or service required for regular use of the product.
3. Modifications, service/repairs, parts or components not authorized by GTM.

GTM shall not be liable for any special, consequential, direct or indirect damages, and expressly states there are no implied warranties. Some states do not allow limitation of incidental or consequential damages, accordingly the above limitations and exclusions may not apply to you. This warranty provides you with specific legal rights which may vary from state to state.

IT IS THE OWNERS RESPONSIBILITY TO PROPERLY COMPLETE AND MAIL THE WARRANTY REGISTRATION CARD.

PROOF OF PURCHASE AND REGISTRATION WILL BE REQUIRED IN ORDER TO OBTAIN WARRANTY SERVICE.

WARRANTY REGISTRATION CARD

Name of Purchaser: _____
Street Address / P.O. Box: _____County:_____
City: _____State_____ Zip Code: _____

Model Number: _____ PURCHASE DATE: _____|_____|_____

Dealer Name: _____
Street Address: _____ County: _____
City: _____State:_____Zip Code: _____

Customer Received: Operators Manual ( ) Safety Instructions ( ) Demonstration ( )

_____ _____ Customers
Signature Date